AMDR®

DOORS - LIGHTS - LIFTING

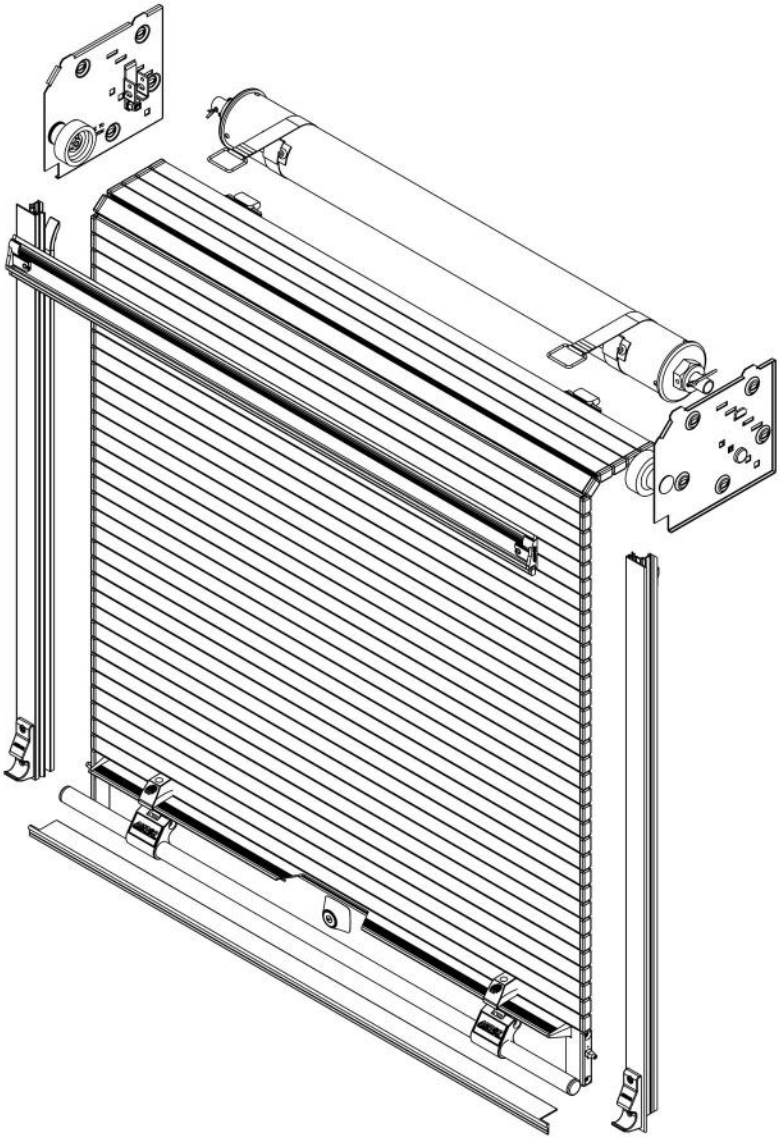

Roll-Up Door Installation Instructions

Revision 4 - 03/03/23

1 Mounting Plate

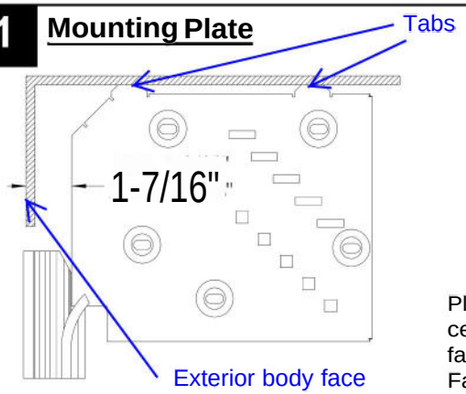

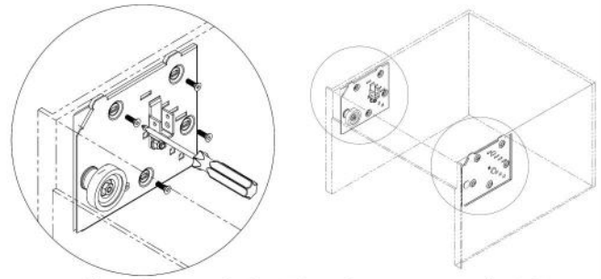

Place mounting plate such that the tabs are up against the ceiling and the plate is positioned back from exterior body face as shown. Mark hole locations and then drill holes. Fasten the mounting plates with screws.

2 Balancer

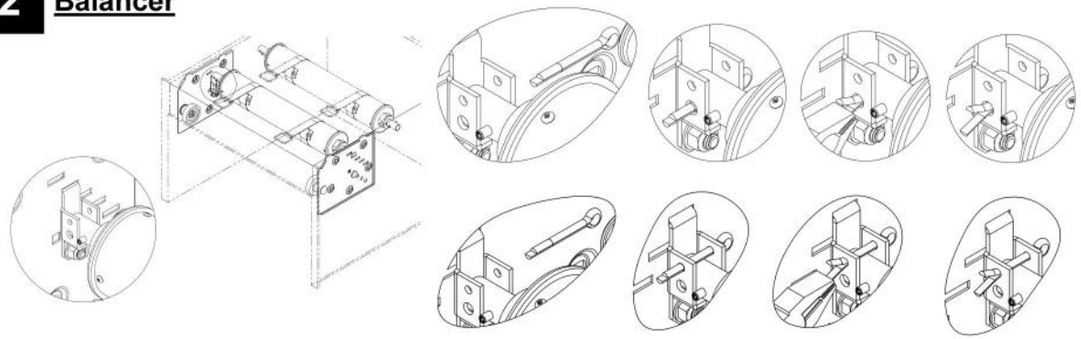

Place the balancer onto the mounting plates. Install cotter pins in holes above shaft on right and through shaft hole on left. Bend cotter pin legs outwards to secure.

3 Sill Plate (Optional)

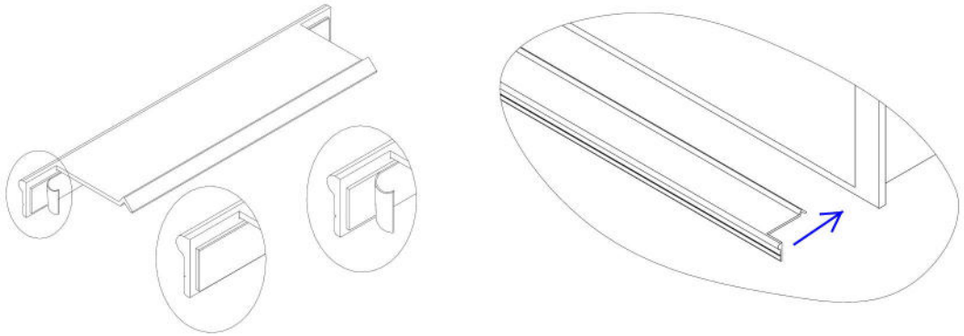

Peel adhesive back and stick sill plate to the compartment's bottom edge.

4 Pre-drilling holes for Side Frames

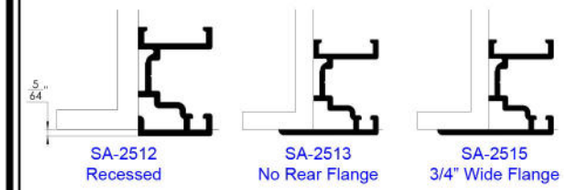

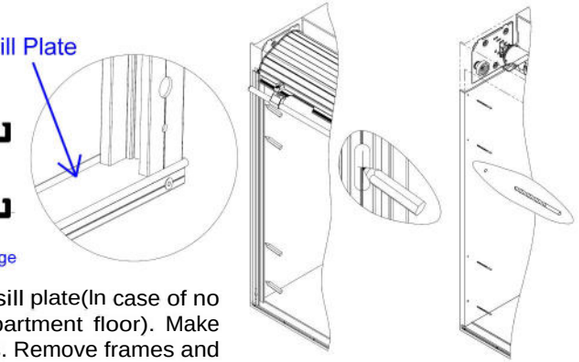

Place side frame as shown so that it touches the sill plate(In case of no sill plate, ensure that side frame touches compartment floor). Make pencil marks at pre-punched slots on side frames. Remove frames and drill holes as a guide using pencil marks.

5 Door Mounting

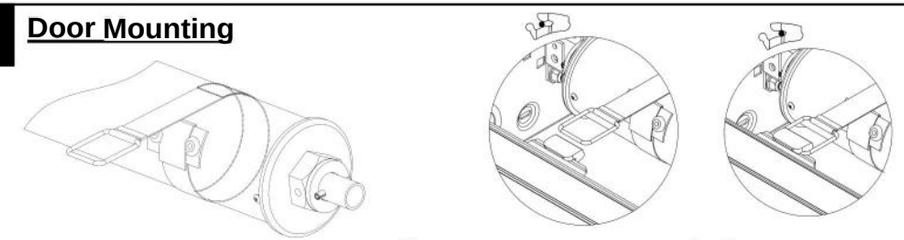

Loop straps behind and over the top of the balancer. Hook the straps onto the door retaining clips until click. Push door slats over top of the idler wheel. Pull out charge pin and slowly let the door roll up.

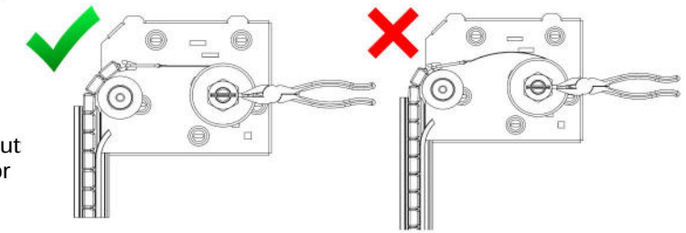

6 Side Frames

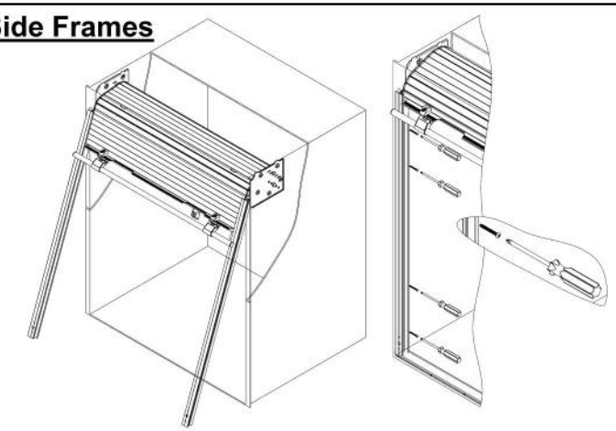

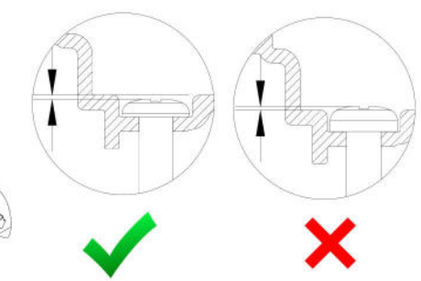

Lift door and slide side frames in place. Secure side frames with screws into holes from Step 4. Make sure the screws are flush with the side frame to prevent door damage.

7 Top Gutter

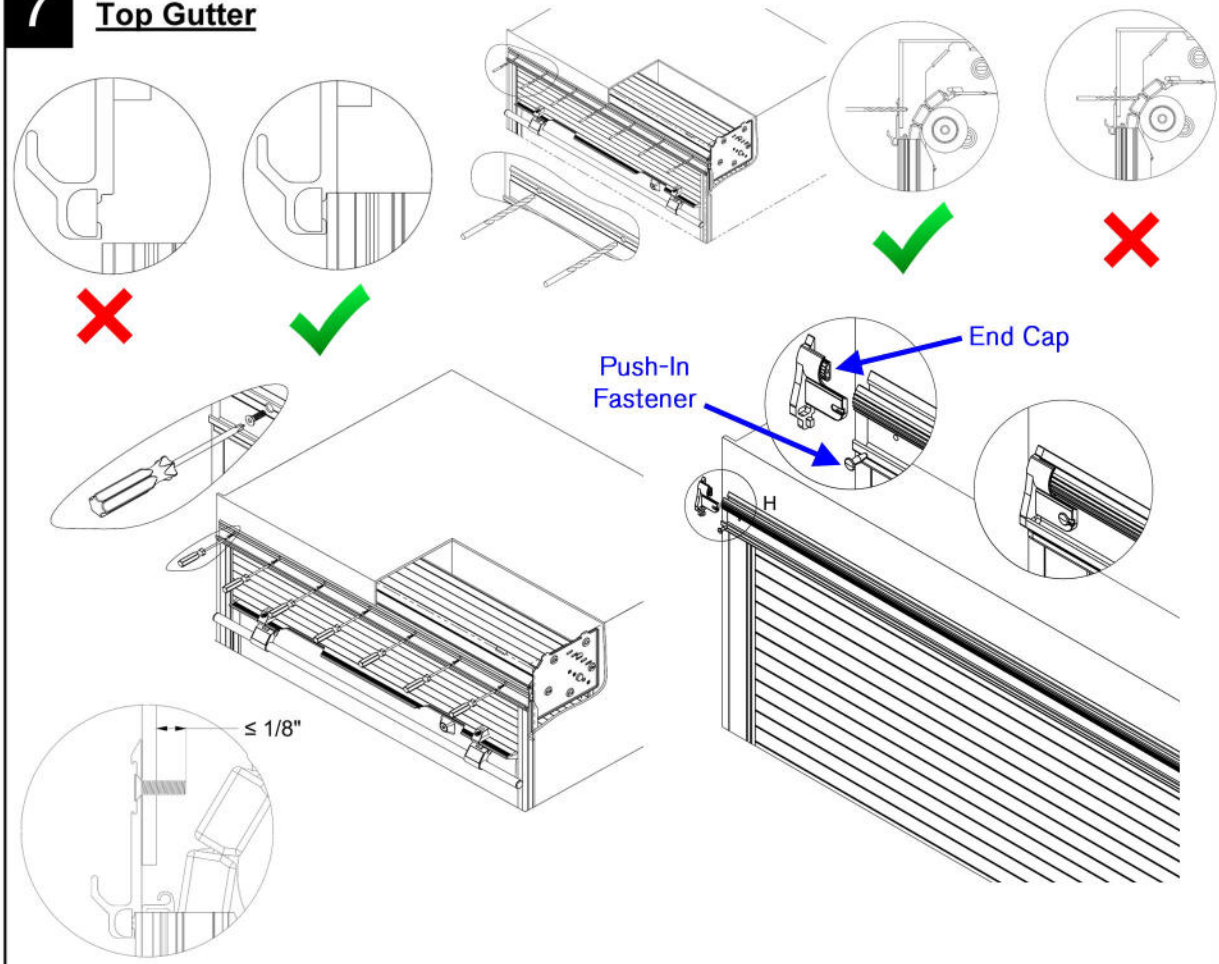

Slide top gutter onto the top edge of both side frames. Drill holes and secure in place with screws. Screws should not protrude more than 1/8" into compartment.

CAUTION: Do not drill too deep and damage the door.

Install top gutter screw cover. Insert end caps at each end of screw cover. Insert push-in fasteners.

For additional information, please visit www.AMDOR.com

Have a question? We're here to help.

T: 1-877-462-6367
E: info@amdor.com
W: www.amdor.com
F: 1-877-462-6300
@AMDORInc
AMDOR Inc.